CO215, Midterm Examination, Spring 2025

Roll Number : CSB23017

Name : Raktim Ranjan Handique

Q1. A memory module of size 256Kx16 is constructed using RAM chips of size 64Kx8. The module should additionally contain a ROM chip of size 1KB where each addressable location is of size 16bits. Design the module in Logisim showing clearly the input address bits and output data bits.

Address Bits Calculation

The memory module has a size of 256K × 16.

256K means 256 × 1024 = 262144 memory locations.

To address 262144 locations,

we need $\log_2(262144) = \log_2(2^{18}) = 18$ address bits.

The ROM chip has a size of 1KB with 16-bit word size.

1KB = 1024 locations.

To address 1024 locations,

we need $\log_2(1024) = \log_2(2^{10})$

$= 10$ address bits.

So, the total address bus width for the module is 18 bits.

Data Bits Calculation

Each memory location in both the RAM and ROM is 16 bits wide.

The data bus width required is 16 bits.

RAM Chips Required

Available RAM chip size is 64K × 8.

64K = 65536 locations.

To form 256K locations, we need 256K / 64K = 4 RAM banks.

Each chip provides only 8 bits,

but we need 16 bits per location.

we need 2 chips per bank to get 16-bit data.

Therefore,

total number of RAM chips = 4 banks × 2 chips

= 8 RAM chips.

ROM Chip Required

The ROM requirement is 1KB × 16.

This is provided as a single chip.

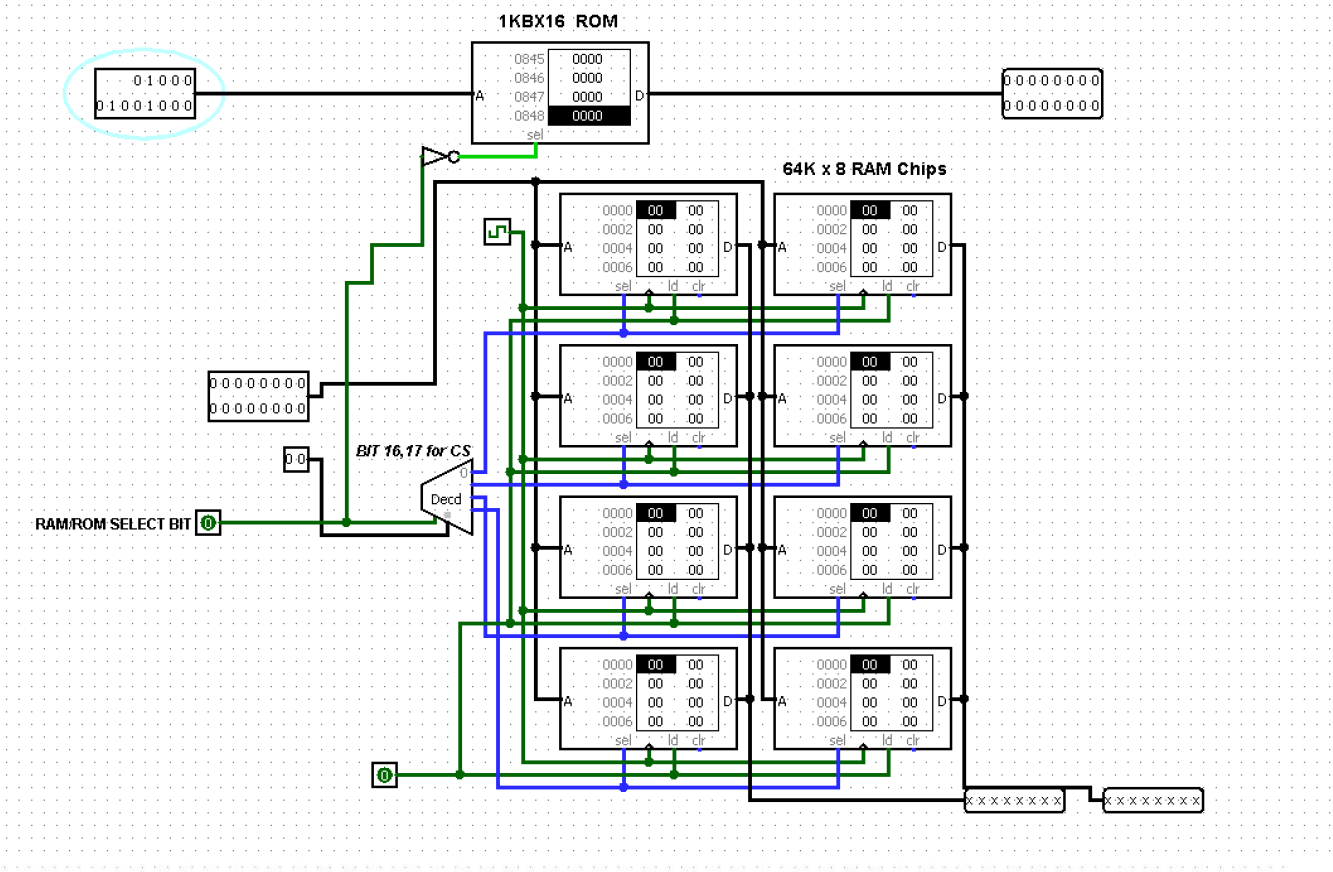

Q2. Write an 8086 assembly program that can display an integer with any number of digits.

```
.model small
.stack 100h

.data
    msg1 db 'Enter a number: $'
    msg2 db 0Dh, 0Ah, 'The number is: $'
    digits db 100 dup(?)
    count db 0

.code
main:
    mov ax, @data
    mov ds, ax

    lea dx, msg1
    mov ah, 09h
    int 21h

    xor cx, cx
    mov si, 0

read_loop:
    mov ah, 01h
    int 21h
    cmp al, 13
    je done_input
    mov digits[si], al
    inc si
    inc cx
    jmp read_loop
```

```
done_input:
    lea dx, msg2
    mov ah, 09h
    int 21h

    mov si, 0

print_loop:
    mov dl, digits[si]
    mov ah, 02h
    int 21h
    inc si
    loop print_loop

    mov ah, 4Ch
    int 21h
end main
```